70057

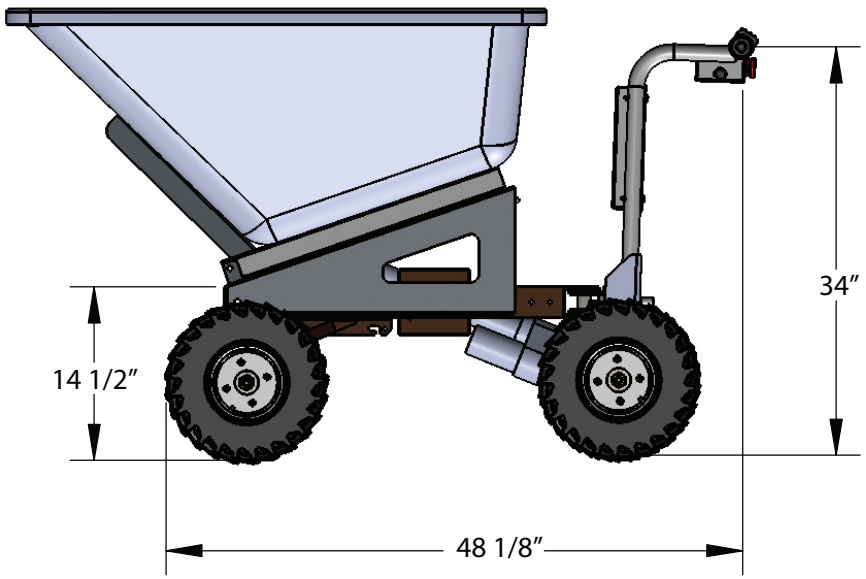

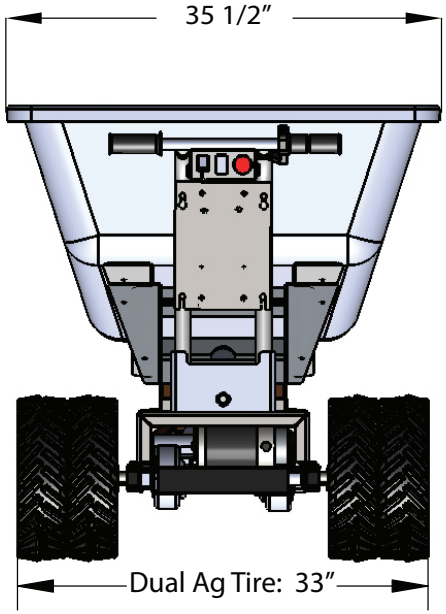

877447-2648
SUPPORT@GRANITEIND.COM

Overland carts
MANUFACTURED BY GRANITE INDUSTRIES