70001

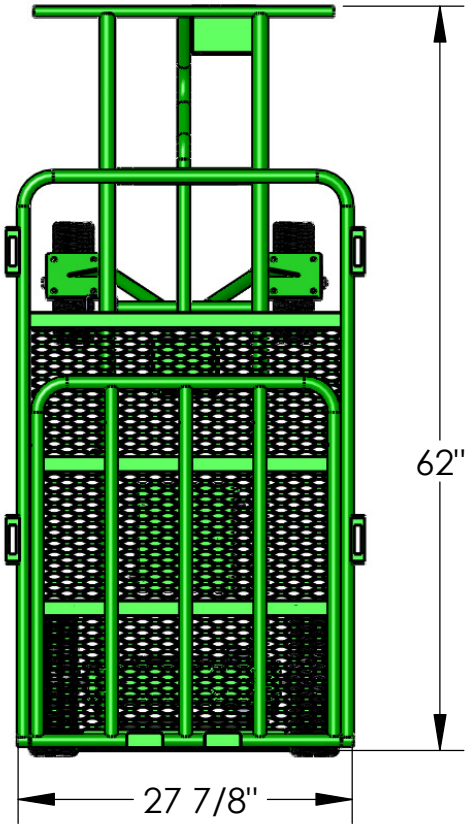

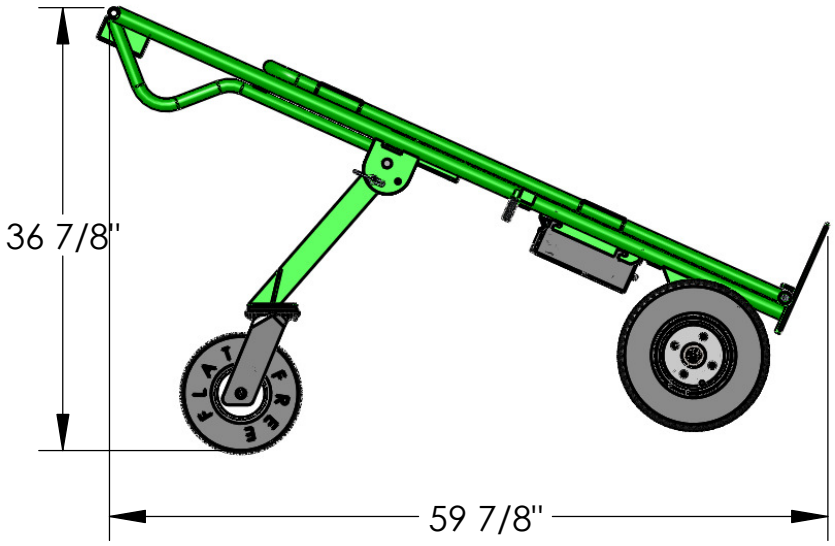

1-877-447-2648
SUPPORT@GRANITEIND.COM

Overland carts
MANUFACTURED BY GRANITE INDUSTRIES